TITLE: 3400HD BALER

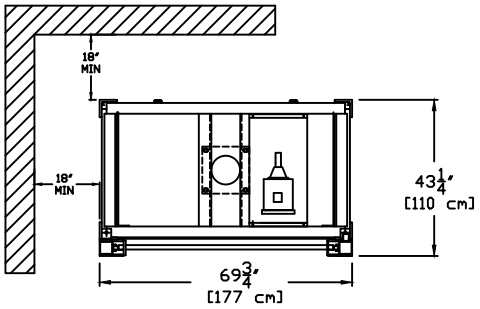

TOP VIEW

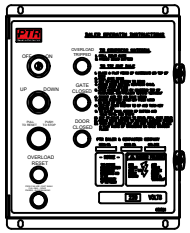

CONTROL BOX
SCALE = 4X

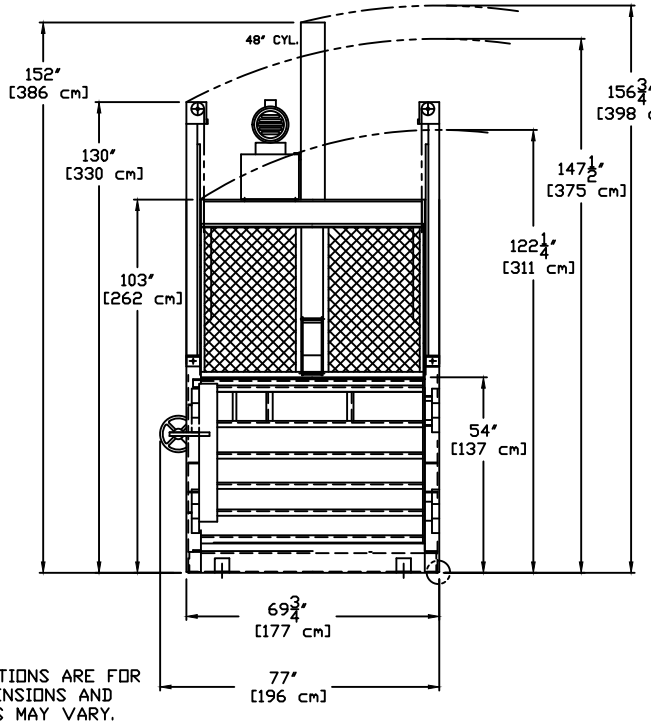

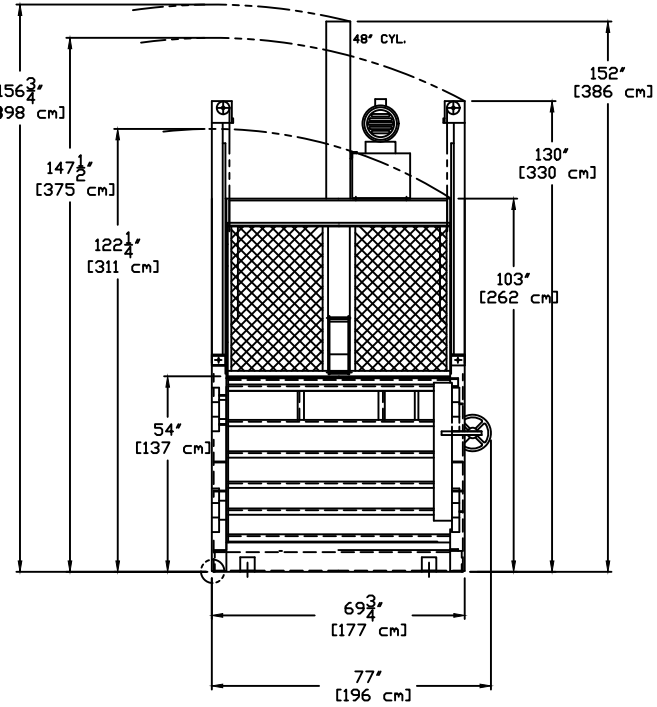

ALL DIMENSION AND SPECIFICATIONS ARE FOR REFERENCE ONLY, ACTUAL DIMENSIONS AND PERFORMANCE CHARACTERISTICS MAY VARY.

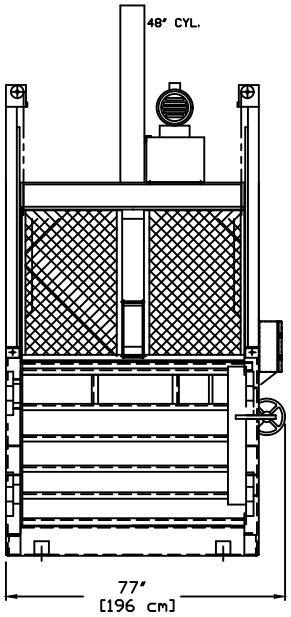

GATE CLOSED

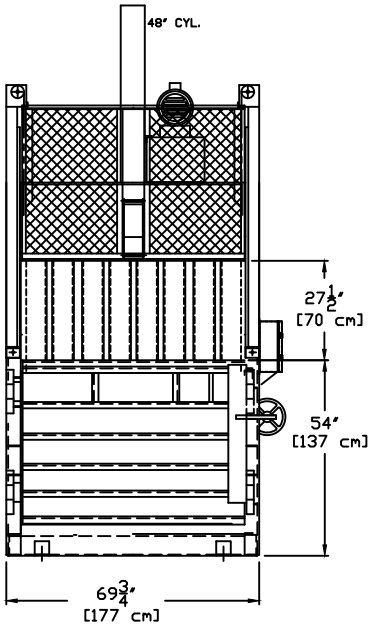

GATE OPEN

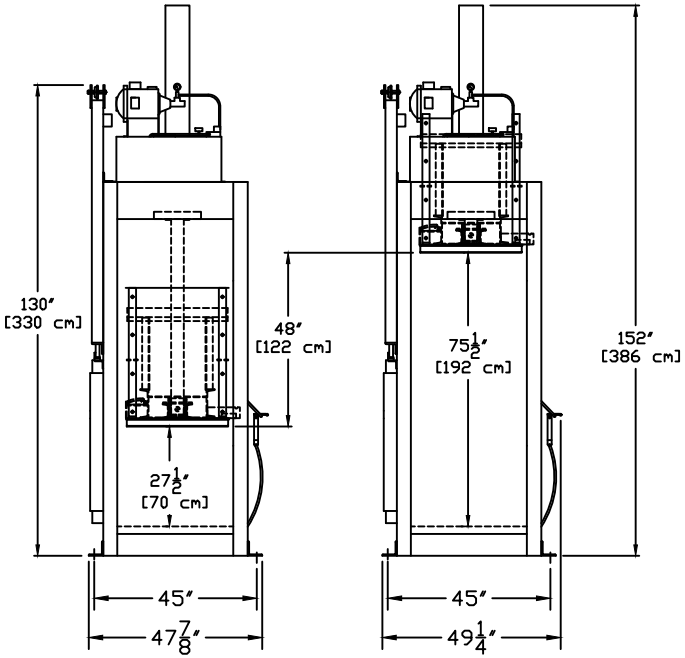

PTR BALER & COMPACTOR

SHT 1 OF 2

DWG. NO:AB405217R1